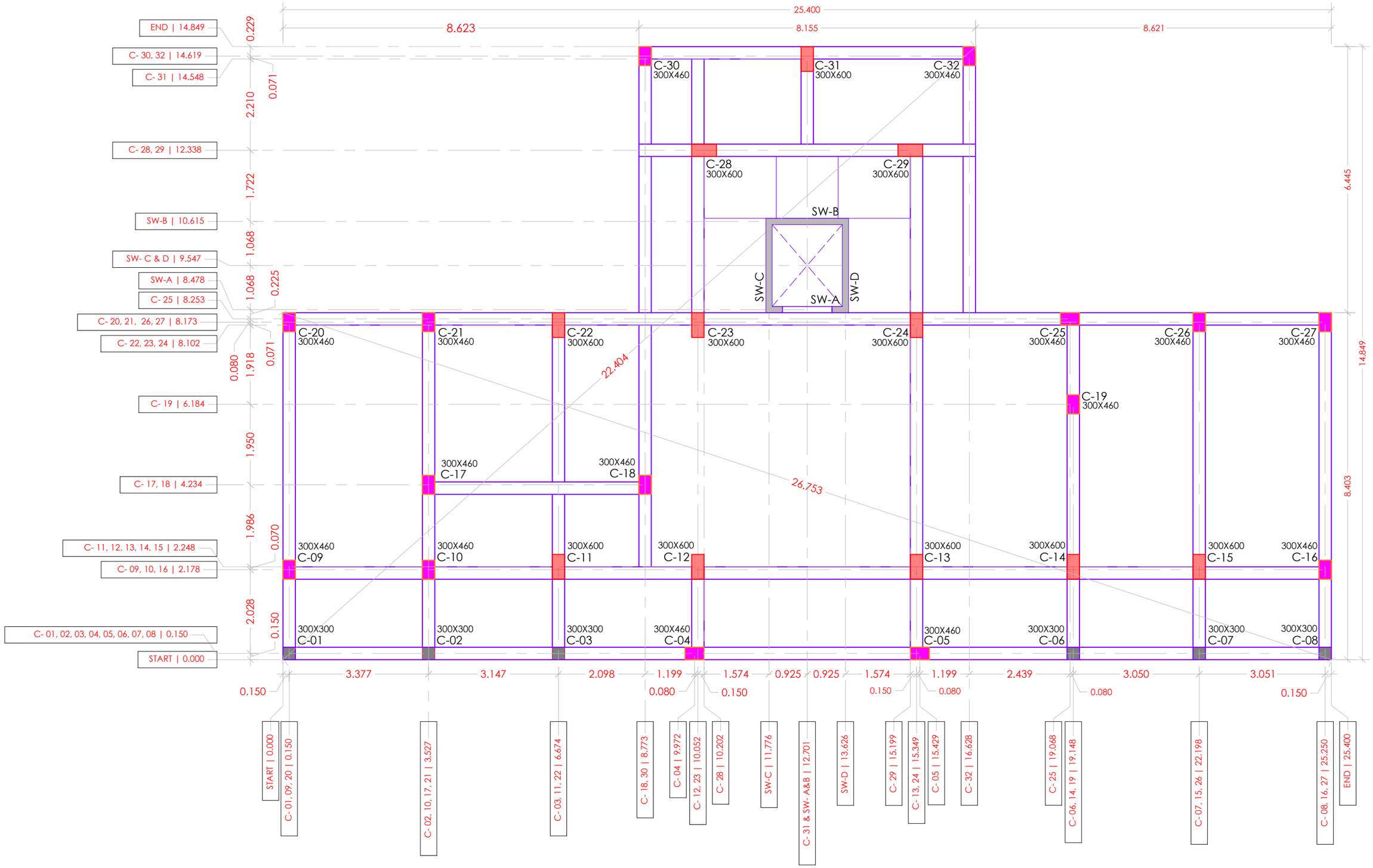

FOR OFFICIAL USE

ORIENTATION	GENERAL NOTE'S:-	PROJECT DETAILS:-	PROJECT MANAGEMENT CONSULTANT:-
		CENTERLINE PLAN FOR PROPOSED PWI OFFICE BUILDING.	
		SHEET NO:- 01 | JOB ID: BW_125	DATE:- 11 APRIL 2026 | REV. : 00

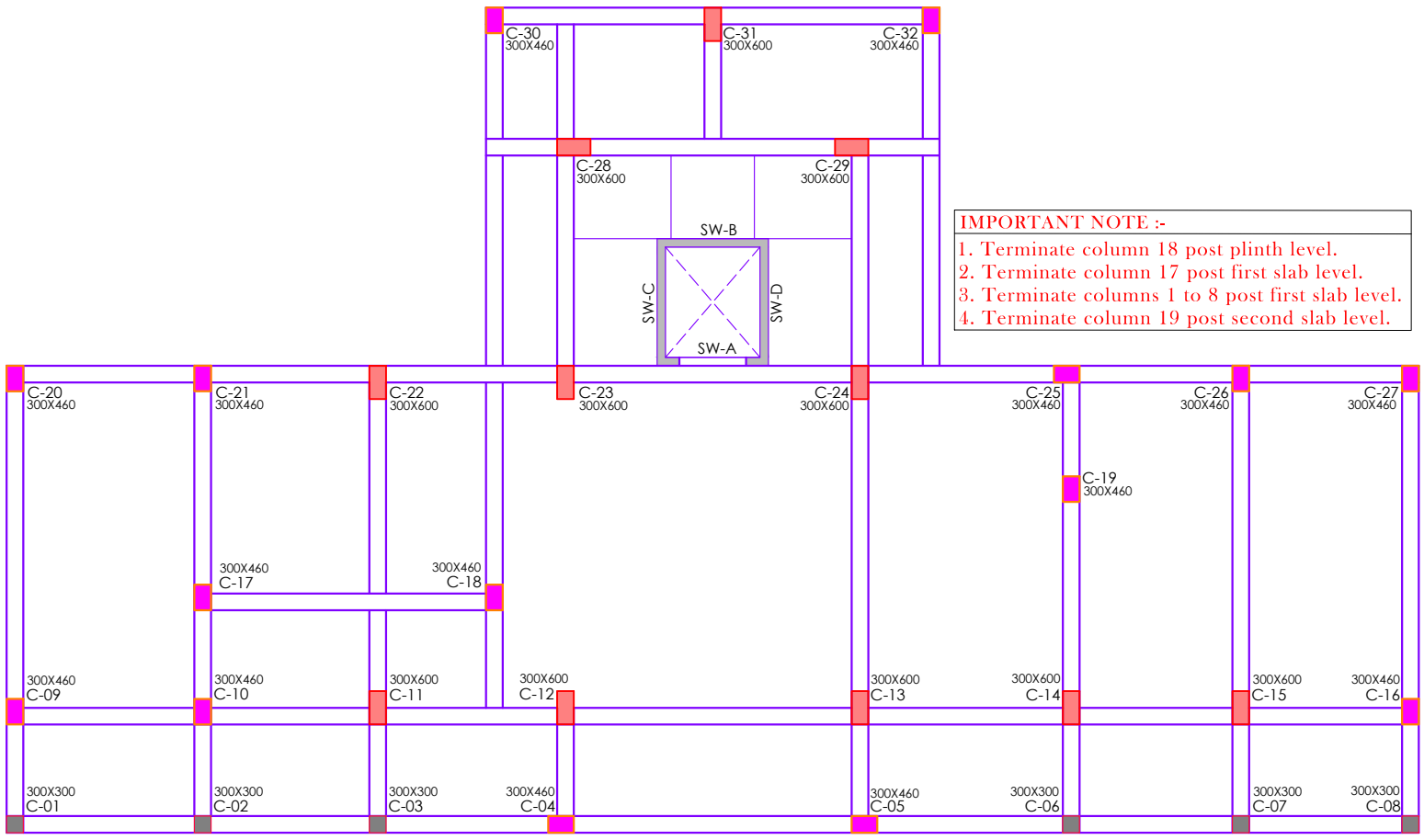

STRUCTURAL LAYOUT PLAN
FOOTING AND COLUMNS

IMPORTANT NOTE :-

1. Terminate column 18 post plinth level.
2. Terminate column 17 post first slab level.
3. Terminate columns 1 to 8 post first slab level.
4. Terminate column 19 post second slab level.

DETAILED CONSTRUCTION NOTES :

DESIGN AS GROUND FLOOR R.C.C. FRAME STRUCTURE

1. STEEL Fe500 AND CONCRETE M25 SHALL BE USED FOR STRUCTURE.
2. CHANGE/REDUCTION IN COLUMN SHOULD BE AT BEAM/SLAB LEVEL. COLUMN JUNCTION ONLY WITH 1 IN 6 SLOPE
3. APPROVED DESIGN MIX.
   - P.C.C. -M15
   - FOUNDATION -M25
   - COLUMNS, BEAMS, SLAB -M25 UNLESS OTHERWISE SPECIFIED
4. ONLY WRITTEN DIMENSIONS SHALL BE FOLLOWED.
5. DRAWING SHALL READ WITH REFERENCE TO ARCHITECTURAL AND SERVICES DRAWING.
6. THE CONTRACTOR IS TO VERIFY ALL DIMENSIONS ON SITE AND IS RESPONSIBLE FOR THE ACCURATE SETTING OUT.
7. LAP LENGTH IN REINFORCEMENT BARS SHALL BE 50 TIMES DIAMETER OF BAR IN BOTH TENSION AND COMPRESSION.
8. CLEAR COVER TO REINFORCEMENT SHALL BE AS FOLLOWS:
   - FOUNDATION -50 MM ON ALL SIDES.
   - COLUMNS -40 MM ON ALL SIDES.
   - BEAMS -30 MM ON SIDES & 25 MM AT TOP & BOTTOM
   - SLAB -25 MM.
9. ASSUME SAFE BEARING CAPACITY OF SOIL 200 KN/M2, SUBJECTED TO CHANGE AS PER SITE SOIL CONDITION.
10. SAFETY & CHECKING OF FORM WORK WILL BE RESPONSIBILITY OF CONTRACTOR.
11. ANY CHANGE IN STRUCTURE AT SITE SHALL BE BROUGHT INTO KNOWLEDGE OF STRUCTURAL CONSULTANT PRIOR TO CASTING OTHERWISE DESIGNER WILL NOT BE RESPONSIBLE FOR SAFETY OF SUCH STRUCTURAL CHANGES.
12. ANY DISCREPPANCY FOUND IN THE DRAWING IS TO BE BROUGHT TO THE NOTICE OF CIVIL STRUCTURAL ENGINEERS IMMEDIATELY.
13. CONTRACTOR & CLIENT SHALL BE RESPONSIBLE FOR QUALITY & STRENGTH OF CONCRETE.
14. "BUILDWEY CONSULTANTS' RESPONSIBILITY SHALL REMAIN LIMITED TO CORRECTNESS OF STRUCTURAL DESIGN AND DRAWINGS.

WE ARE NOT RESPONSIBLE FOR:

a) DESIGN OF CENTERING , SHUTTERING , FRAMEWORK DURING CONSTRUCTION.
b) CONCRETE MIX DESIGN FOR VARIOUS CONCRETE GRADES.
c) SAFETY OF ANY ADJOINING EXISTING STRUCTURES / RETAINED SOIL MASS / NEAR BY ROADS.
d) SAFETY OF WORKERS / EQUIPMENTS DURING CONSTRUCTION.
e) ACCIDENTS DUE TO PREMATURE DESHUTTERING.
f) FAULTY CONSTRUCTION METHODS / MATERIAL / WORKMANSHIP.

REINFORCEMENT CHECKING IF REQUIRED, BUT RESPONSIBILITY

15. TECHNICAL ASSISTANCE SHALL BE PROVIDED FOR SLAB OF EXECUTION SHALL REMAIN SOLELY WITH CONTRACTOR.

1. SCHEDULE OF FOOTINGS :-

SR. NO.	GROUP	COLUMN NO.	SIZE OF P.C.C.	SIZE OF FOOTING	DEPTH	BOTTOM FACE STEELIN FOOTING		TOP FACE STEEL IN FOOTING		REMARKS
						ALONG LENGHT(L)	ALONG BREADTH(B)	ALONG LENGHT(L)	ALONG BREADTH(B)	
1	F-01	C - 01, **02**, 03, 06, 07, 08.	1600X1600	1400 X 1400	500	12MM @ 150MM C/C	12MM @ 150MM C/C	12MM @ 300MM C/C	12MM @ 300MM C/C	ISOLATED BOX FOOTING (06)
2	F-02	C - 04, 05, **17**, 18.	1500X1700	1300X1500	500	12MM @ 150MM C/C	12MM @ 150MM C/C	12MM @ 300MM C/C	12MM @ 300MM C/C	ISOLATED BOX FOOTING (04)
3	F-03	C - 09, **10**, 16, 19, 20, 21, 25, 26, 27, 30, 32.	1800X2000	1600X1800	550	12MM @ 150MM C/C	12MM @ 150MM C/C	12MM @ 300MM C/C	12MM @ 300MM C/C	ISOLATED BOX FOOTING (11)
4	F-04	C - 11, **12**, 13, 14, 15, 22, 31.	2000X2300	1800X2100	600	16MM @ 150MM C/C	16MM @ 150MM C/C	12MM @ 150MM C/C	12MM @ 150MM C/C	ISOLATED BOX FOOTING (07)
5	F-05	C - **23**, 24, 28, 29.	2400X2600	2200X2400	600	16MM @ 150MM C/C	16MM @ 150MM C/C	12MM @ 150MM C/C	12MM @ 150MM C/C	ISOLATED BOX FOOTING (04)

2. SCHEDULE OF COLUMN :-

SR. NO.	COLUMN NO	SIZE OF COLUMNS	STEEL IN COLUMNS	LATERAL TIES (RINGS)		SKETCH C/S		COUNT
				MIDDLE HEIGHT ZONE	COLUMN-BEAM JUNCTION(END ZONE)			
1	C - 01, **02**, 03, 06, 07, 08.	300 x 300	8 NOS-12MM TOR.	8MM TOR @ 100C/C	8MM TOR @ 75 C/C			06
2	C - 04, 05, **17**, 18.	300 x 460	8NOS-12MM TOR.	8MM TOR @ 100C/C DOUBLE RINGS	8MM TOR @ 75C/C DOUBLE RINGS			04
3	C - 09, **10**, 16, 19, 20, 21, 25, 26, 27, 30, 32.	300 x 460	8 NOS-16MM TOR.	8MM TOR @ 100C/C DOUBLE RINGS	8MM TOR @ 75C/C DOUBLE RINGS			11
4	C - 11, **12**, 13, 14, 15, 22, 31.	300 x 600	10 NOS-12MM TOR.	8MM TOR @ 100C/C 3-SET OF RINGS	8MM TOR @ 75C/C 3-SET OF RINGS			07
5	C - **23**, 24, 28, 29.	300 x 600	10 NOS-16MM TOR.	8MM TOR @ 100C/C 3-SET OF RINGS	8MM TOR @ 75C/C 3-SET OF RINGS			04

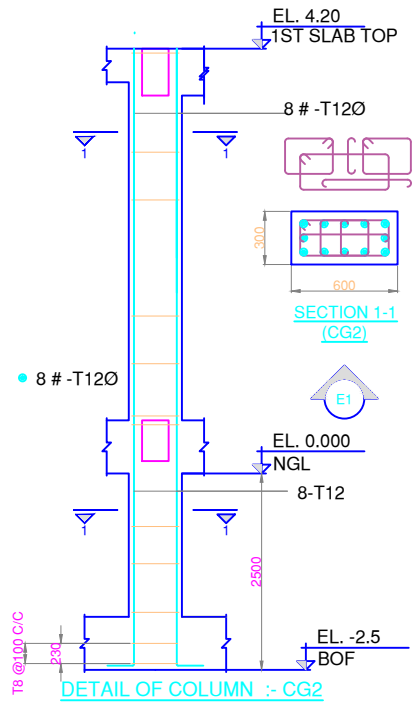

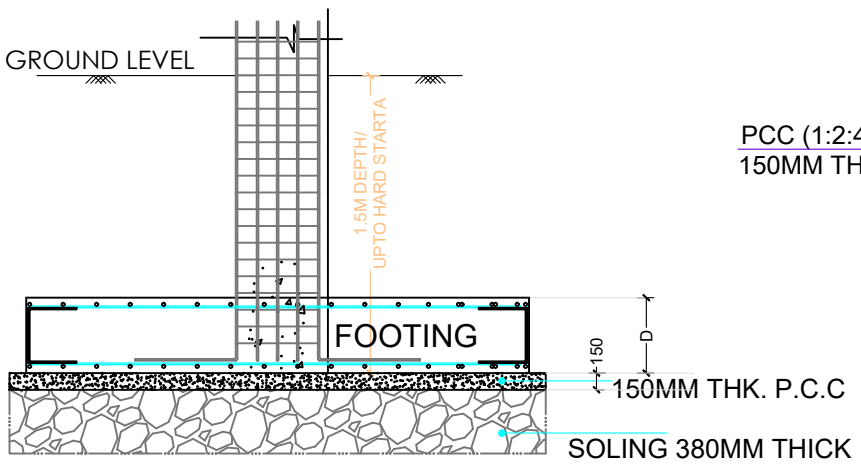

FOOTING SECTION

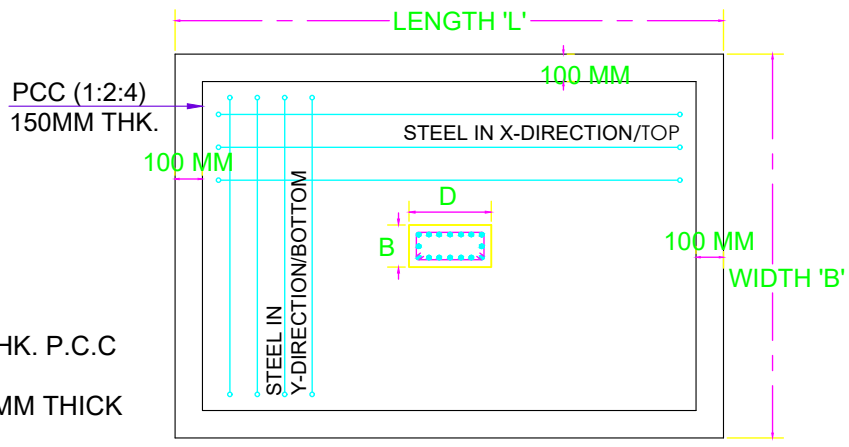

PLAN

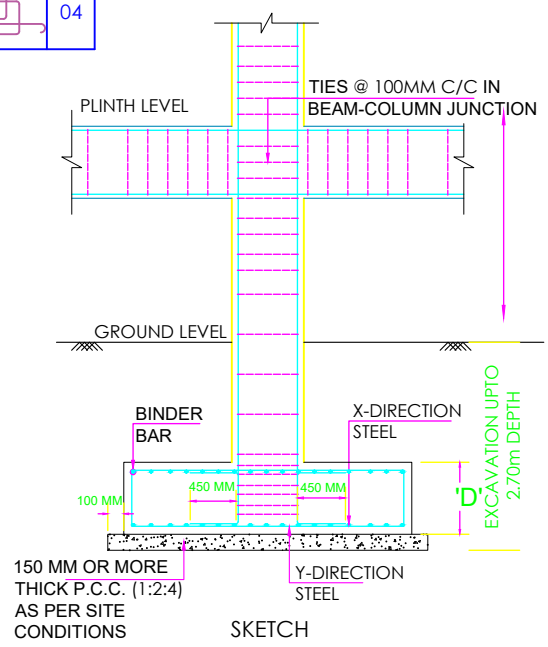

SKETCH

SIGNATURE	GENERAL NOTE'S:-	PROJECT DETAILS:-	PROJECT MANAGEMENT CONSULTANT:-
	* GRADE OF CONCRETE M - 25 & GRADE OF STEEL Fe500 * SBC OF STRATA IS CONSIDERED AS 200 kN/Sq. M. TO BE VERIFIED WITH SITE SOIL TESTING REPORT. * COVER TO REINFORCEMENT FOR FOOTING IS 50 mm, * COVER TO COLUMNS IS 40 MM, BEAMS IS 25 MM, SLAB IS 20MM * STRUCTURAL DESIGN IS FOR G+2 FLOOR ONLY. * DIMENSIONS ARE NOT TO BE SCALED. * MECHANICAL MIXER SHOULD BE USED FOR CONCRETE. * STEEL SHOULD BE CHECKED BY ENGINEER BEFORE CONCRETING. * MINIMUM STAGGARED LAP LENGTH SHOULD BE 50 TIMES DIA. OF REBAR.	R.C.C DESIGN DETAILS OF FOOTING AND COLUMNS FOR PROPOSED PWI OFFICE BUILDING.	
		SHEET NO:- 02 | JOB ID: BW_125	DATE:- 11 APRIL 2026 | REV. : 00

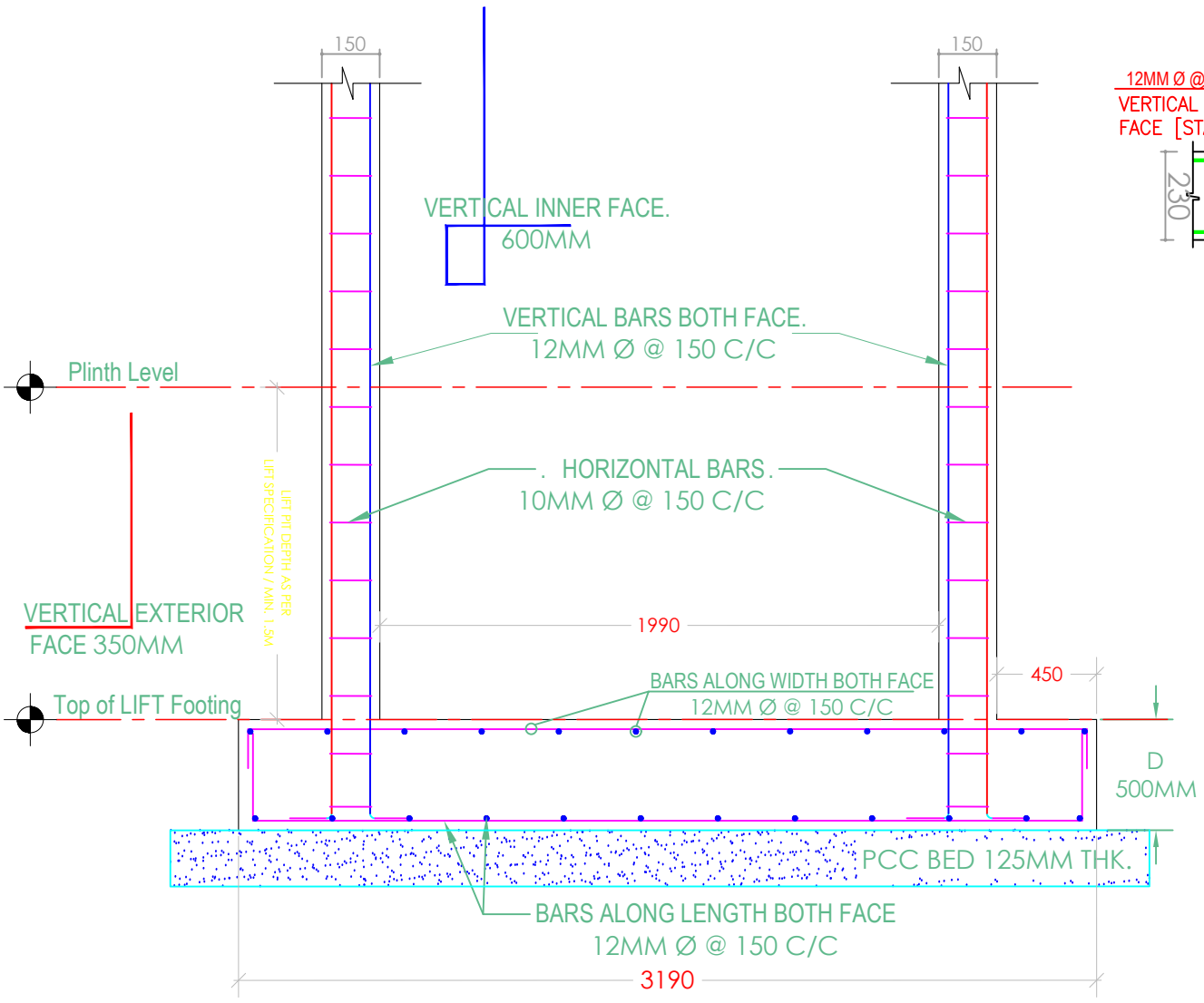

SECTION A-A

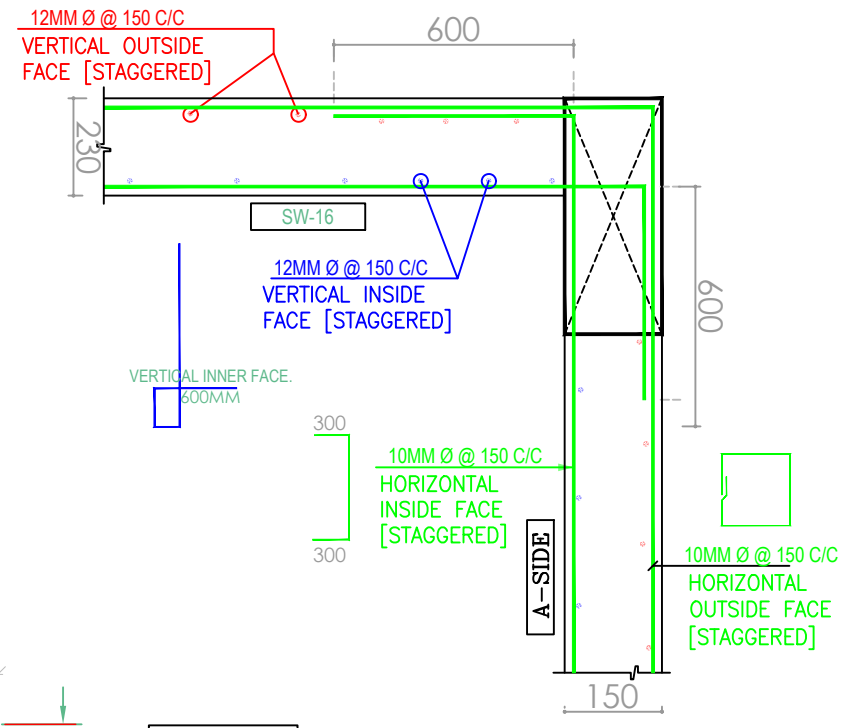

A-SIDE

150MM THICK R.C.C PARDI UPTO PLINTH LEVEL ONLY.

DETAIL AT CORNER

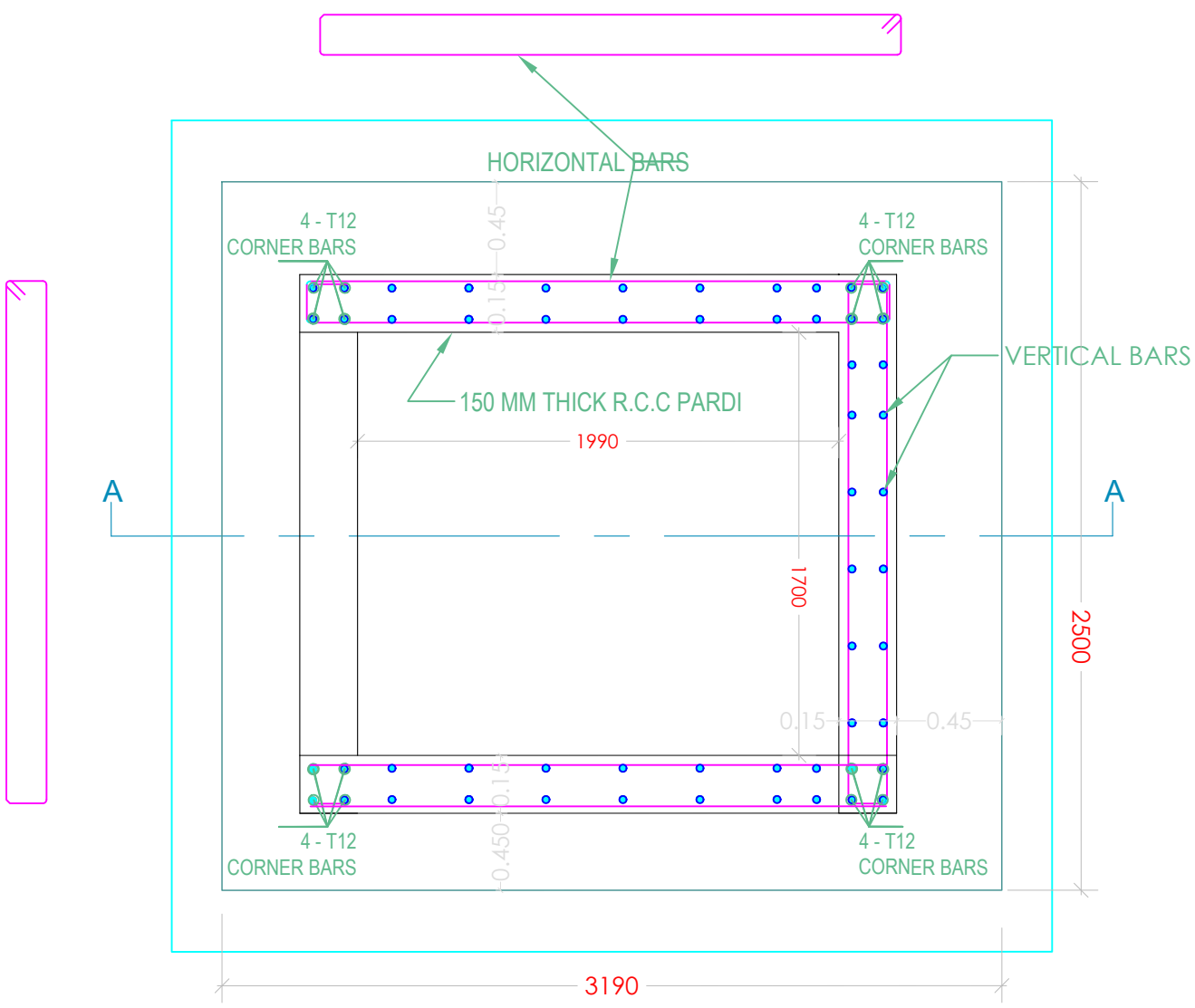

PLAN

REINFORCEMENT DETAIL OF SHEAR WALL (PARDI)

GENERAL NOTES :-	PROJECT DETAILS	STRUCTURAL CONSULTANT
1. THIS DRAWING SHALL BE READ IN CONJUNCTION WITH RELEVANT SECTIONAL DETAILS ARCHITECTURAL & DRAWINGS. 2. FOR CENTERLINE PURPOSE, REFER ARCHITECTURAL DRAWINGS. 3. R.C.C DESIGN IS FOR G+2 STOREY BUILDING. 4. S.B.C. OF THE SOIL IS CONSIDERED AS 200KN/SQ.M IN THE STRUCTURAL ANALYSIS SHALL BE VERIFIED/CHECKED WITH SOIL REPORT OF THE SITE. 5. GRADE OF CONCRETE AND STEEL SHALL BE TAKEN AS M25 AND FE500 RESPECTIVELY UNLESS OTHERWISE SPECIFIED CONFORMING TO IS: 456-2000, IS: 1786-2008. 6. CLEAR COVER FOR COLUMN, PILE AND PILE CAP SHALL BE TAKEN AS 40MM, 50MM AND 50MM RESPECTIVELY UNLESS OTHERWISE SPECIFIED.FOR BEAMS COVER IS 30MM & SLAB 20MM. 7. L/BENT LENGTH OF COLUMN REINFORCEMENT IN PILE CAP SHALL BE TAKEN AS 12 MM#-350MM, 16MM#-450MM, 20MM#-500MM25MM#-600MM 8. SHUTTERING AND SCAFFOLDING IS THE RESPONSIBILITY OF CONTRACTOR. 9. ANY DISCREPANCY/DOUBT FOUND IN THE DRAWLING SHALL BE CLEARED AND BROUGHT TO NOTICE BEFORE COMMENCEMENT OF ACTUAL WORK. 10. ALL MISHAPS/ACCIDENTS OCCURRING ON THE SITE DURING CONSTRUCTION WILL BE THE RESPONSIBILITY OF CONTRACTOR.	R.C.C DETAILS OF LIFT SHAFT SHEAR WALL & FOUNDATION FOR PROPOSED PWI OFFICE BUILDING. DWG NO.:- 03 | 09ARP 26 | BW/125	

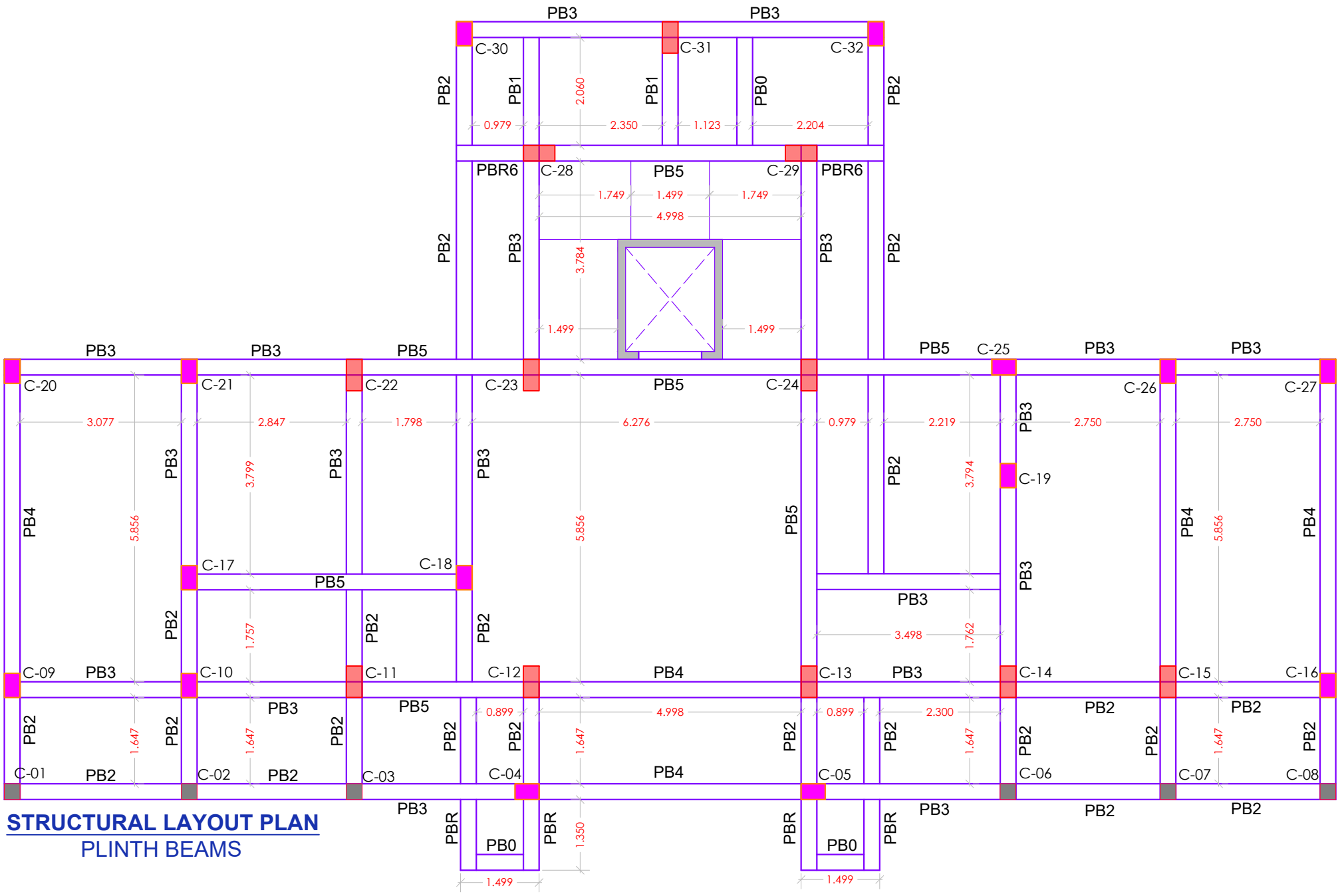

STRUCTURAL LAYOUT PLAN
PLINTH BEAMS

3. SCHEDULE OF PILINTH BEAMS :-

SR. NO.	BEAM	C/S SIZE	STEEL IN BEAMS		CURTAIL BAR 0.6	EXTRA TOP (AT FIXED END) 0.25L	STIRRUPS		REMARKS
			AT TOP	AT BOTTOM			AT SUPPORT	AT CENTER	
1	PB0	300X380	2NOS - 12MM TOR.	2 NOS - 12MM TOR.	- - -	- - -	8MM @ 100MM C/C	8MM @ 150MM C/C	PLINTH BEAM - 03
2	PB1	300X380	2NOS - 12MM TOR.	3 NOS - 12MM TOR.	- - -	1 NOS - 16MM TOR.	8MM @ 100MM C/C	8MM @ 150MM C/C	PLINTH BEAM - 02
3	PB2	300X460	3NOS - 12MM TOR.	2 NOS - 16MM TOR.	1 NOS - 16MM TOR.	1 NOS - 16MM TOR.	8MM @ 100MM C/C	8MM @ 150MM C/C	PLINTH BEAM - 24
4	PB3	300X460	2NOS - 16MM TOR.	2 NOS - 16MM TOR.	1 NOS - 16MM TOR.	2 NOS - 16MM TOR.	8MM @ 100MM C/C	8MM @ 130MM C/C	PLINTH BEAM - 19
5	PB4	300X460	2NOS - 16MM TOR.	2 NOS - 16MM TOR.	1 NOS - 12MM TOR.	2 NOS - 16MM TOR.	8MM @ 100MM C/C	8MM @ 150MM C/C	PLINTH BEAM - 05
6	PB5	300X530	3NOS - 16MM TOR.	2 NOS - 16MM TOR.	- - -	2 NOS - 16MM TOR.	8MM @ 75MM C/C	8MM @ 130MM C/C	PLINTH BEAM - 07
7	PBR6	300X530	3NOS - 16MM TOR.	2 NOS - 16MM TOR.	- - -	1 NOS - 16MM TOR.	8MM @ 100MM C/C	8MM @ 100MM C/C	CANTILEVER BEAM - 02
8	PBR	300X460	2 NOS - 16MM TOR.	2 NOS - 12MM TOR.	- - -	1 NOS - 12MM TOR.	8MM @ 100MM C/C	8MM @ 100MM C/C	CANTILEVER BEAM - 04

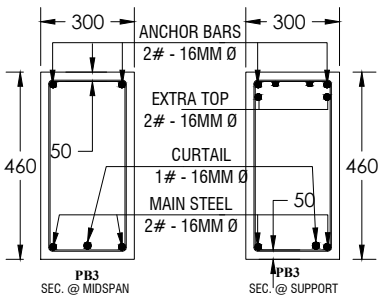

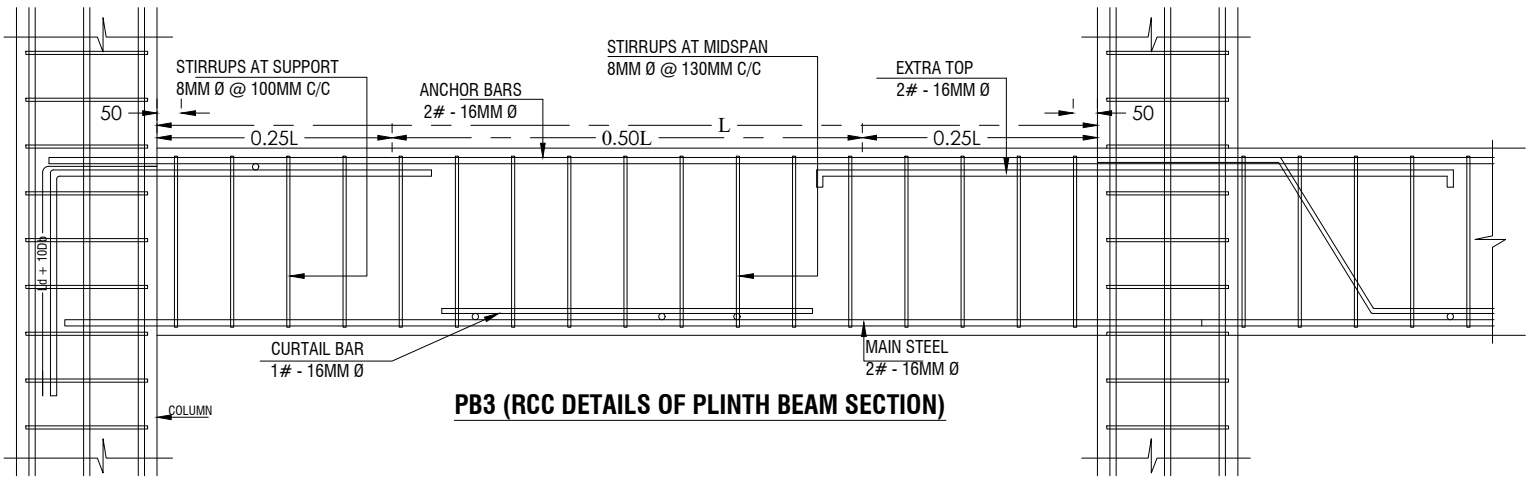

PB3 (RCC DETAILS OF PLINTH BEAM SECTION)

SIGNATURE	GENERAL NOTE'S:-	PROJECT DETAILS:-	PROJECT MANAGEMENT CONSULTANT:-
	* GRADE OF CONCRETE M - 25 & GRADE OF STEEL Fe500 * SBC OF STRATA IS CONSIDERED AS 200 kN/Sq. M. TO BE VERIFIED WITH SITE SOIL TESTING REPORT. * COVER TO REINFORCEMENT FOR FOOTING IS 50 mm, * COVER TO COLUMNS IS 40 MM, BEAMS IS 25 MM, SLAB IS 20MM * STRUCTURAL DESIGN IS FOR G+2 FLOOR ONLY. * DIMENSIONS ARE NOT TO BE SCALED. * MECHANICAL MIXER SHOULD BE USED FOR CONCRETE. * STEEL SHOULD BE CHECKED BY ENGINEER BEFORE CONCRETING. * MINIMUM STAGGARED LAP LENGTH SHOULD BE 50 TIMES DIA. OF REBAR.	R.C.C DESIGN DETAILS OF PLINTH FOR PROPOSED PWI OFFICE BUILDING.	
		SHEET NO:- 04 | JOB ID: BW_125	DATE:- 11 APRIL 2026 | REV. : 00

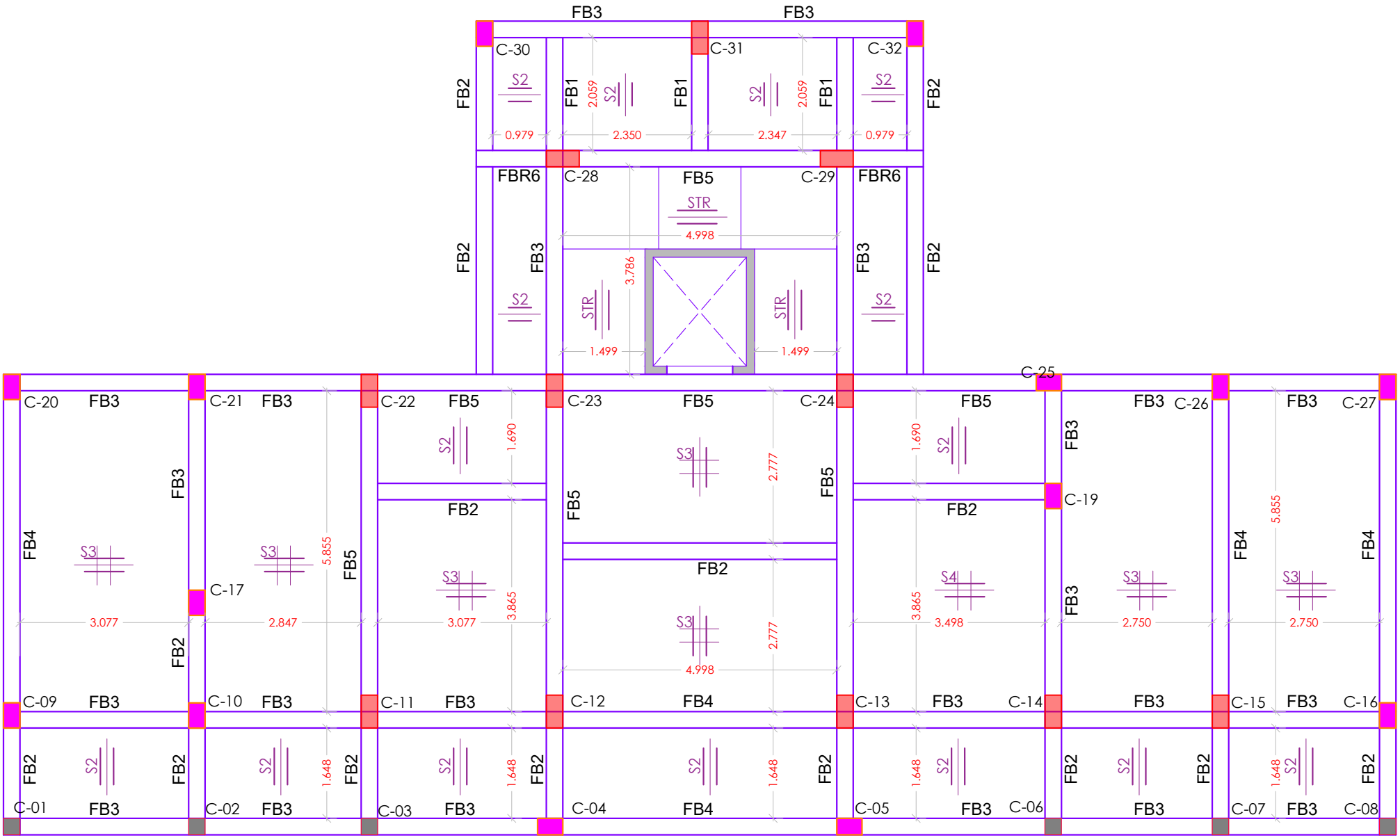

STRUCTURAL LAYOUT PLAN

1st SLAB | GROUND FLOOR BEAMS

4. SCHEDULE OF BEAMS (G.F 1ST SLAB) :-

SR. NO.	BEAM	C/S SIZE	STEEL IN BEAMS		CURTAIL BAR 0.6	EXTRA TOP (AT FIXED END) 0.25L	STIRRUPS		REMARKS
			AT TOP	AT BOTTOM			AT SUPPORT	AT CENTER	
1	FB1	300 X 460	2 NOS - 12MM TOR.	2 NOS - 12MM TOR.	- - -	1 NOS - 16MM TOR.	8MM @ 100MM C/C	8MM @ 150MM C/C	FLOOR BEAM - 03
2	FB2	300 X 530	2 NOS - 16MM TOR.	2 NOS - 16MM TOR.	1 NOS - 12MM TOR.	1 NOS - 16MM TOR.	8MM @ 100MM C/C	8MM @ 150MM C/C	FLOOR BEAM - 16
3	FB3	300 X 530	2 NOS - 16MM TOR.	2 NOS - 16MM TOR.	1 NOS - 12MM TOR.	2 NOS - 16MM TOR.	8MM @ 100MM C/C	8MM @ 130MM C/C	FLOOR BEAM - 23
4	FB4	300 X 600	2 NOS - 16MM TOR.	3 NOS - 16MM TOR.	- - -	3 NOS - 16MM TOR.	8MM @ 75MM C/C	8MM @ 150MM C/C	FLOOR BEAM - 05
5	FB5	300 X 600	3 NOS - 16MM TOR.	3 NOS - 16MM TOR.	1 NOS - 20MM TOR.	2 NOS - 20MM TOR.	8MM @ 100MM C/C 3-LEGGED STIRRUPS	8MM @ 130MM C/C 3-LEGGED STIRRUPS	FLOOR BEAM -07
6	FBR6	300 X 600	2 NOS - 20MM TOR.	2 NOS - 16MM TOR.	- - -	2 NOS - 16MM TOR.	8MM @ 100MM C/C	8MM @ 100MM C/C	CANTILEVER BEAM - 02

5. SCHEDULE OF SLAB (G.F 1ST SLAB) :-

SR. NO.	SLAB	THICKNESS (MM)	STEEL IN SLAB		EXTRA TOP L / 4	DISTRIBUTION STEEL	REAMARKS
			SHORT SPAN	LONG SPAN			
1	S2	125	10MM @ 150MM C/C L-BENT AT ENDS	- - -	- - -	10MM @ 180MMC/C	1 - WAY SLAB
2	S3	125	10MM @ 150MM C/C ALT B/UP	10MM @ 150MM C/C ALT B/UP	10MM @ 300MM C/C	- - -	2 - WAY SLAB
3	S4	125	10MM @ 130MM C/C ALT B/UP	10MM @ 130MM C/C ALT B/UP	10MM @ 260MM C/C	- - -	2 - WAY SLAB
4	STR	180	12 MM @ 100MM C/C ALT B/UP	- - -	12 MM @ 200MM C/C	10MM @ 150MMC/C	STAIRCASE SLAB

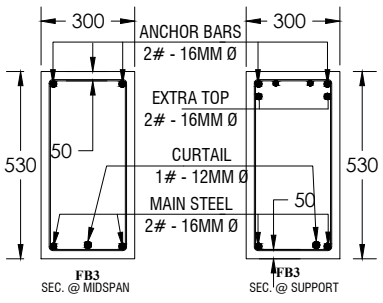

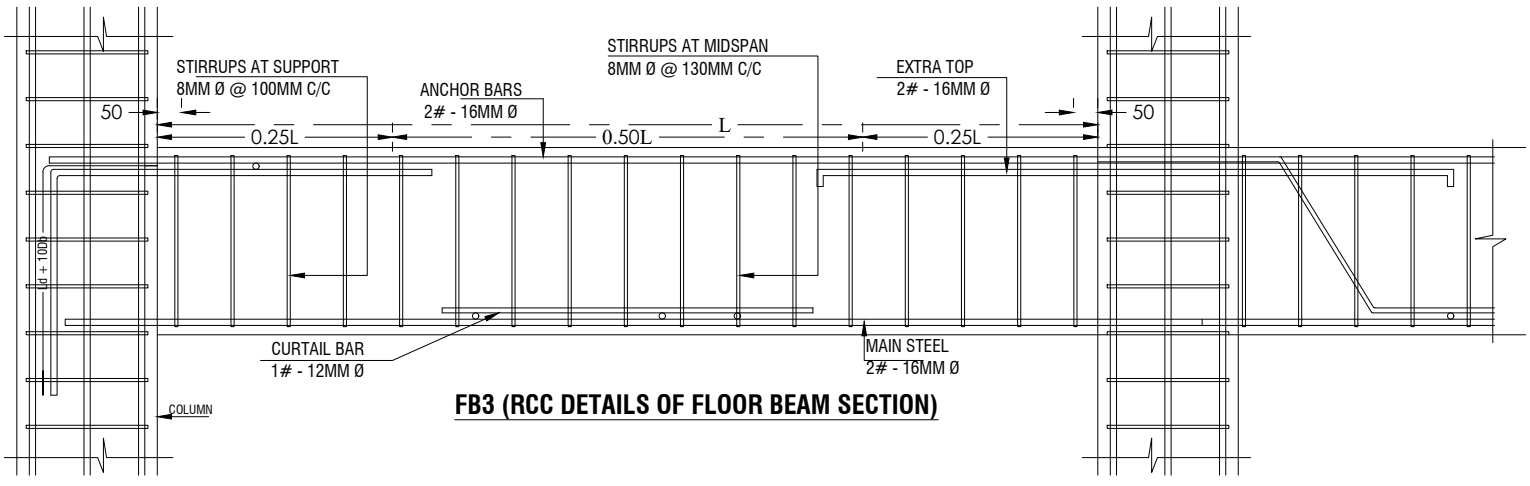

FB3 (RCC DETAILS OF FLOOR BEAM SECTION)

SIGNATURE	GENERAL NOTE'S:-	PROJECT DETAILS:-	PROJECT MANAGEMENT CONSULTANT:-
	* GRADE OF CONCRETE M - 25 & GRADE OF STEEL Fe500 * SBC OF STRATA IS CONSIDERED AS 200 kN/Sq. M. TO BE VERIFIED WITH SITE SOIL TESTING REPORT. * COVER TO REINFORCEMENT FOR FOOTING IS 50 mm, * COVER TO COLUMNS IS 40 MM, BEAMS IS 25 MM, SLAB IS 20MM * STRUCTURAL DESIGN IS FOR G+2 FLOOR ONLY. * DIMENSIONS ARE NOT TO BE SCALED. * MECHANICAL MIXER SHOULD BE USED FOR CONCRETE. * STEEL SHOULD BE CHECKED BY ENGINEER BEFORE CONCRETING. * MINIMUM STAGGARED LAP LENGTH SHOULD BE 50 TIMES DIA. OF REBAR.	R.C.C DESIGN DETAILS OF GROUND FLOOR BEAMS (1ST SLAB) FOR GAD OF PROPOSED PWI OFFICE BUILDING.	
		SHEET NO:- 05 | JOB ID: BW_125	DATE:- 11 APRIL 2026 | REV. : 00

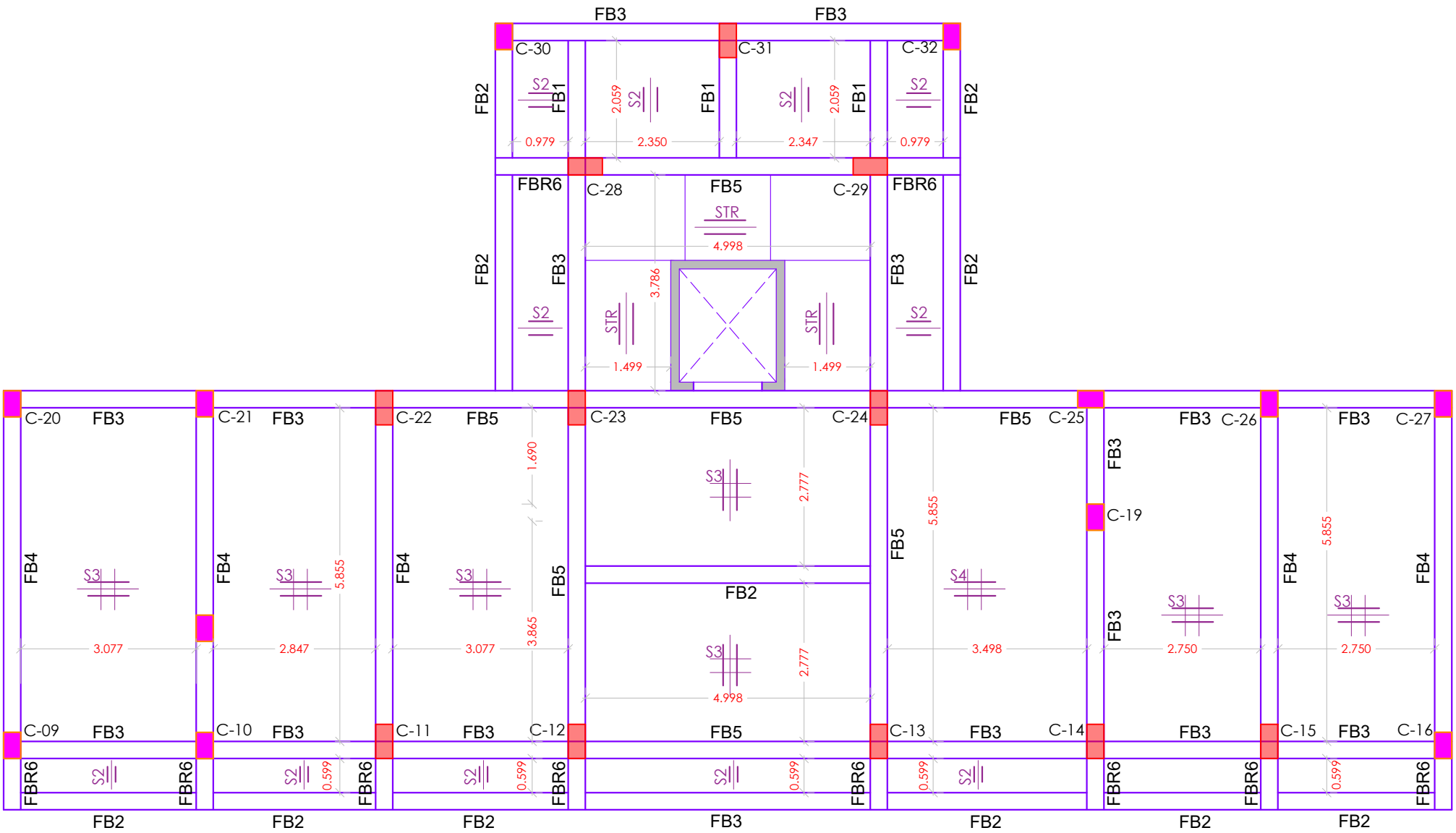

STRUCTURAL LAYOUT PLAN

2ND SLAB | FIRST FLOOR BEAMS

6. SCHEDULE OF BEAMS (F.F 2ND SLAB) :-

SR. NO.	BEAM	C/S SIZE	STEEL IN BEAMS		CURTAIL BAR 0.6	EXTRA TOP (AT FIXED END) 0.25L	STIRRUPS		REMARKS
			AT TOP	AT BOTTOM			AT SUPPORT	AT CENTER	
1	FB1	300 X 460	2 NOS - 12MM TOR.	2 NOS - 12MM TOR.	- - -	1 NOS - 12MM TOR.	8MM @ 100MM C/C	8MM @ 150MM C/C	FLOOR BEAM - 03
2	FB2	300 X 460	2 NOS - 16MM TOR.	2 NOS - 16MM TOR.	1 NOS - 12MM TOR.	1 NOS - 16MM TOR.	8MM @ 100MM C/C	8MM @ 150MM C/C	FLOOR BEAM - 11
3	FB3	300 X 460	2 NOS - 16MM TOR.	2 NOS - 16MM TOR.	1 NOS - 12MM TOR.	2 NOS - 16MM TOR.	8MM @ 100MM C/C	8MM @ 130MM C/C	FLOOR BEAM - 17
4	FB4	300 X 600	3 NOS - 16MM TOR.	3 NOS - 16MM TOR.	1 NOS - 12MM TOR.	2 NOS - 16MM TOR.	8MM @ 75MM C/C	8MM @ 130MM C/C	FLOOR BEAM - 05
5	FB5	300 X 600	3 NOS - 16MM TOR.	3 NOS - 16MM TOR.	1 NOS - 16MM TOR.	2 NOS - 20MM TOR.	8MM @ 100MM C/C 3-LEGGED STIRRUPS	8MM @ 130MM C/C 3-LEGGED STIRRUPS	FLOOR BEAM - 07
6	FBR6	300 X 600	3 NOS - 16MM TOR.	2 NOS - 16MM TOR.	- - -	1 NOS - 20MM TOR.	8MM @ 100MM C/C	8MM @ 100MM C/C	CANTILEVER BEAM - 10

7. SCHEDULE OF SLAB (F.F 2ND SLAB) :-

SR. NO.	SLAB	THICKNESS (MM)	STEEL IN SLAB		EXTRA TOP L / 4	DISTRIBUTION STEEL	REAMARKS
			SHORT SPAN	LONG SPAN			
1	S2	125	10MM @ 150MM C/C L-BENT AT ENDS	- - -	- - -	10MM @ 180MMC/C	1 - WAY SLAB
2	S3	125	10MM @ 150MM C/C ALT B/UP	10MM @ 150MM C/C ALT B/UP	10MM @ 300MM C/C	- - -	2 - WAY SLAB
3	S4	125	10MM @ 130MM C/C ALT B/UP	10MM @ 130MM C/C ALT B/UP	10MM @ 260MM C/C	- - -	2 - WAY SLAB
4	STR	180	12 MM @ 100MM C/C ALT B/UP	- - -	12 MM @ 200MM C/C	10MM @ 150MMC/C	STAIRCASE SLAB

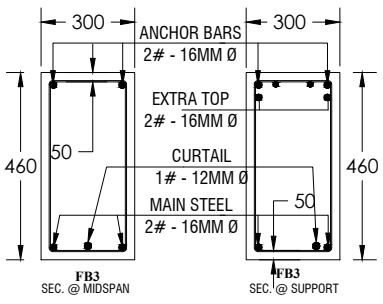

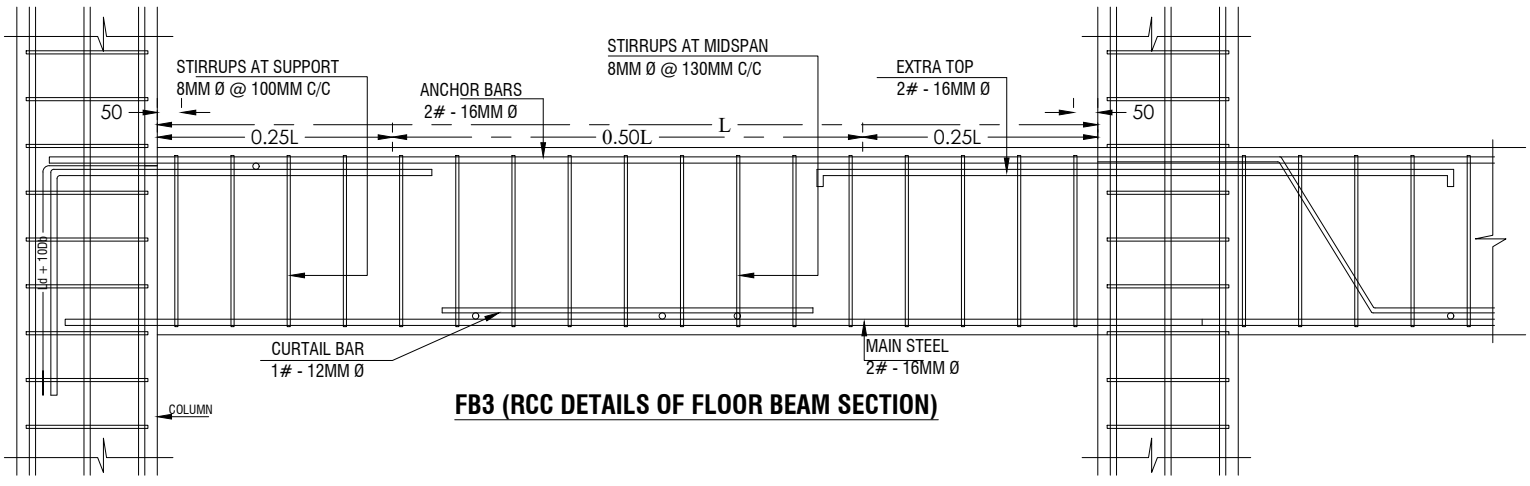

FB3 (RCC DETAILS OF FLOOR BEAM SECTION)

SIGNATURE	GENERAL NOTE'S:-	PROJECT DETAILS:-	PROJECT MANAGEMENT CONSULTANT:-
	* GRADE OF CONCRETE M - 25 & GRADE OF STEEL Fe500 * SBC OF STRATA IS CONSIDERED AS 200 kN/Sq. M. TO BE VERIFIED WITH SITE SOIL TESTING REPORT. * COVER TO REINFORCEMENT FOR FOOTING IS 50 mm, * COVER TO COLUMNS IS 40 MM, BEAMS IS 25 MM, SLAB IS 20MM * STRUCTURAL DESIGN IS FOR G+2 FLOOR ONLY. * DIMENSIONS ARE NOT TO BE SCALED. * MECHANICAL MIXER SHOULD BE USED FOR CONCRETE. * STEEL SHOULD BE CHECKED BY ENGINEER BEFORE CONCRETING. * MINIMUM STAGGARED LAP LENGTH SHOULD BE 50 TIMES DIA. OF REBAR.	R.C.C DESIGN DETAILS OF FIRST FLOOR BEAMS (2ND SLAB) FOR PROPOSED PWI OFFICE BUILDING.	
		SHEET NO:- 06 | JOB ID: BW_125	DATE:- 11 APRIL 2026 | REV. : 00

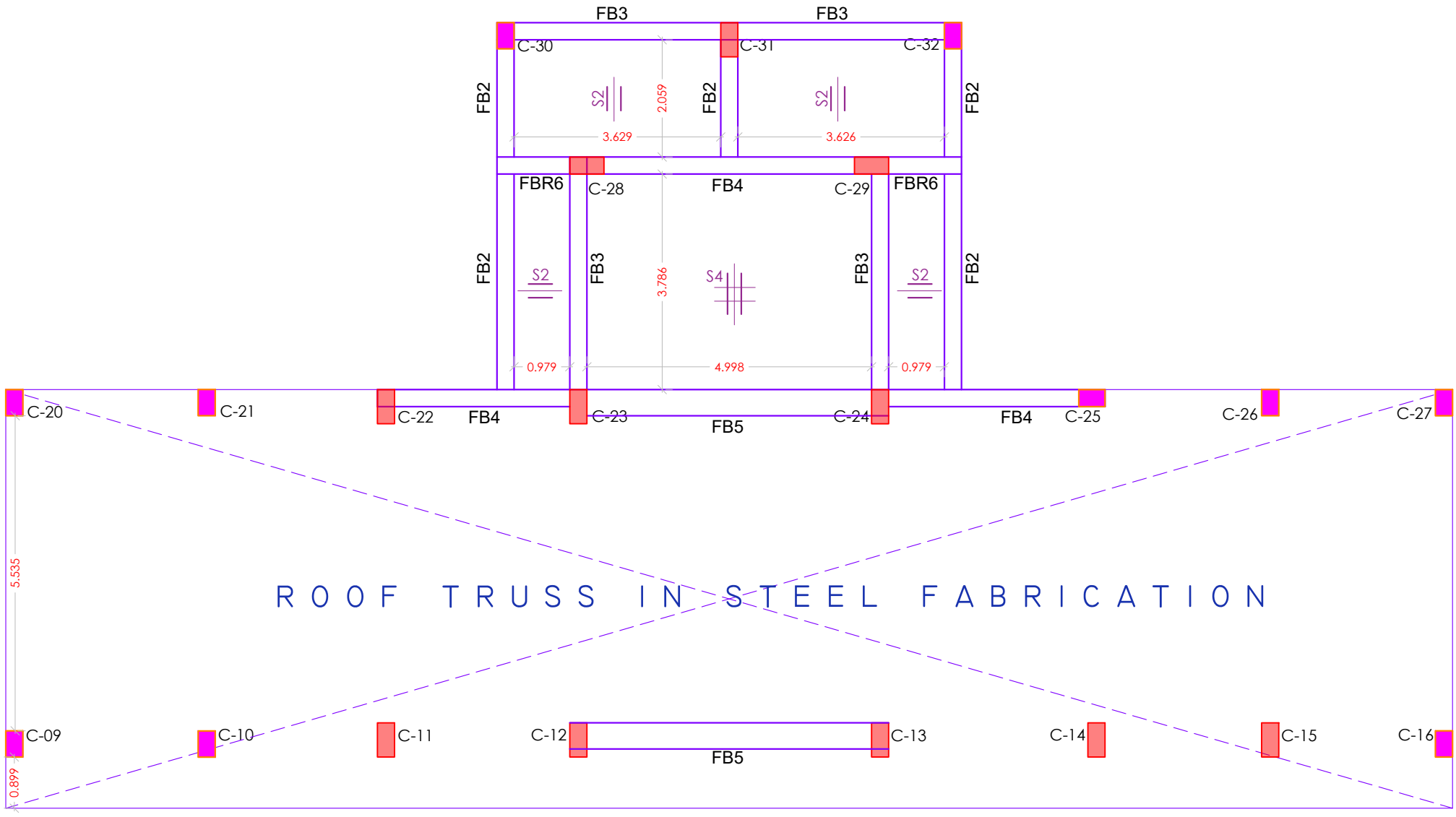

STRUCTURAL LAYOUT PLAN

3RD SLAB | SECOND FLOOR BEAMS

8. SCHEDULE OF BEAMS (S.F 3RD SLAB) :-

SR. NO.	BEAM	C/S SIZE	STEEL IN BEAMS		CURTAIL BAR 0.6	EXTRA TOP (AT FIXED END) 0.25L	STIRRUPS		REMARKS
			AT TOP	AT BOTTOM			AT SUPPORT	AT CENTER	
1	FB2	300 X 460	2 NOS - 16MM TOR.	2 NOS - 12MM TOR.	1 NOS - 16MM TOR.	1 NOS - 16MM TOR.	8MM @ 100MM C/C	8MM @ 150MM C/C	FLOOR BEAM - 05
2	FB3	300 X 460	2 NOS - 16MM TOR.	2 NOS - 16MM TOR.	1 NOS - 12MM TOR.	1 NOS - 16MM TOR.	8MM @ 100MM C/C	8MM @ 150MM C/C	FLOOR BEAM - 04
3	FB4	300 X 600	2 NOS - 16MM TOR.	3 NOS - 16MM TOR.	- - -	1 NOS - 16MM TOR.	8MM @ 100MM C/C	8MM @ 130MM C/C	FLOOR BEAM - 03
4	FB5	460 X 600	3 NOS - 16MM TOR.	3 NOS - 16MM TOR.	2 NOS - 16MM TOR.	2 NOS - 16MM TOR.	8MM @ 100MM C/C	8MM @ 130MM C/C	FLOOR BEAM - 02
5	FBR6	300 X 600	3 NOS - 16MM TOR.	2 NOS - 16MM TOR.	- - -	- - -	8MM @ 100MM C/C	8MM @ 100MM C/C	CANTILEVER BEAM - 02

9. SCHEDULE OF SLAB (S.F 3RD SLAB) :-

SR. NO.	SLAB	THICKNESS (MM)	STEEL IN SLAB		EXTRA TOP L / 4	DISTRIBUTION STEEL	REAMARKS
			SHORT SPAN	LONG SPAN			
1	S2	125	10MM @ 150MM C/C L-BENT AT ENDS	- - -	- - -	10MM @ 180MMC/C	1 - WAY SLAB
2	S3	125	10MM @ 150MM C/C ALT B/UP	10MM @ 150MM C/C ALT B/UP	10MM @ 300MM C/C	- - -	2 - WAY SLAB
3	S4	125	10MM @ 130MM C/C ALT B/UP	10MM @ 130MM C/C ALT B/UP	10MM @ 260MM C/C	- - -	2 - WAY SLAB
4	STR	180	12 MM @ 100MM C/C ALT B/UP	- - -	12 MM @ 200MM C/C	10MM @ 150MMC/C	STAIRCASE SLAB

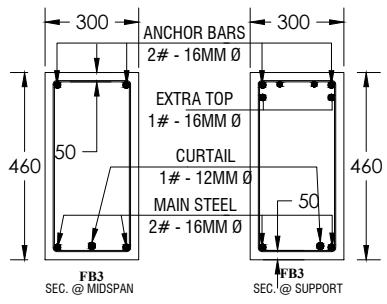

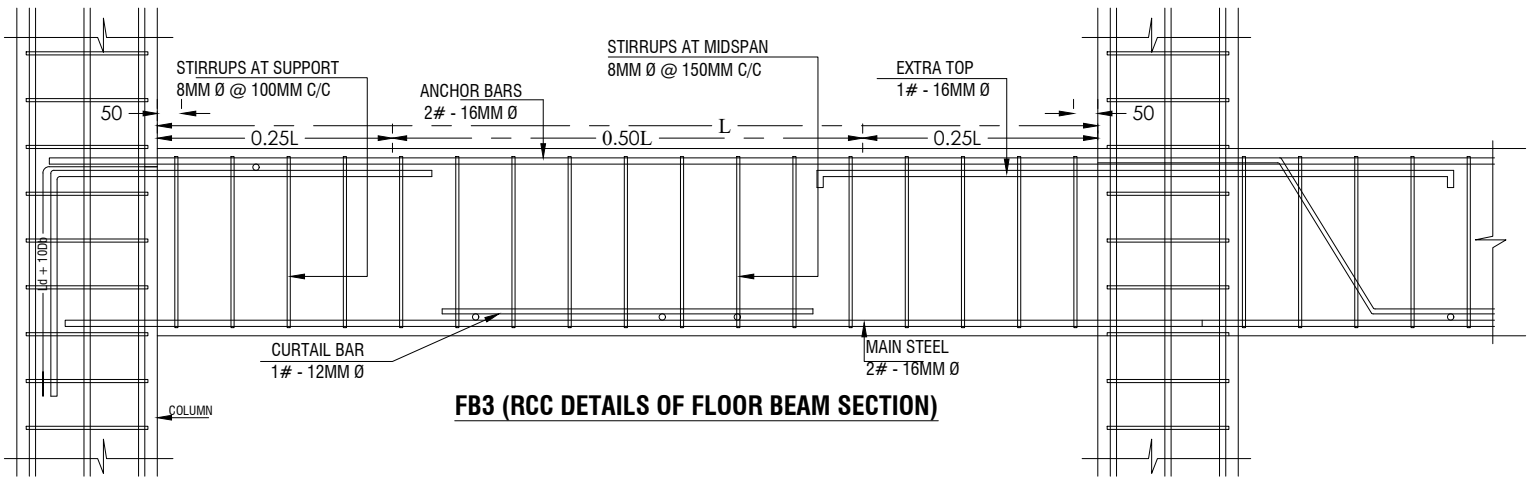

FB3 (RCC DETAILS OF FLOOR BEAM SECTION)

SIGNATURE	GENERAL NOTE'S:-	PROJECT DETAILS:-	PROJECT MANAGEMENT CONSULTANT:-
	* GRADE OF CONCRETE M - 25 & GRADE OF STEEL Fe500 * SBC OF STRATA IS CONSIDERED AS 200 kN/Sq. M. TO BE VERIFIED WITH SITE SOIL TESTING REPORT. * COVER TO REINFORCEMENT FOR FOOTING IS 50 mm, * COVER TO COLUMNS IS 40 MM, BEAMS IS 25 MM, SLAB IS 20MM * STRUCTURAL DESIGN IS FOR G+2 FLOOR ONLY. * DIMENSIONS ARE NOT TO BE SCALED. * MECHANICAL MIXER SHOULD BE USED FOR CONCRETE. * STEEL SHOULD BE CHECKED BY ENGINEER BEFORE CONCRETING. * MINIMUM STAGGARED LAP LENGTH SHOULD BE 50 TIMES DIA. OF REBAR.	R.C.C DESIGN DETAILS OF SECOND FLOOR BEAMS (3RD SLAB) FOR PROPOSED PWI OFFICE BUILDING.	
		SHEET NO:- 07 | JOB ID: BW_125	DATE:- 11 APRIL 2026 | REV. : 00

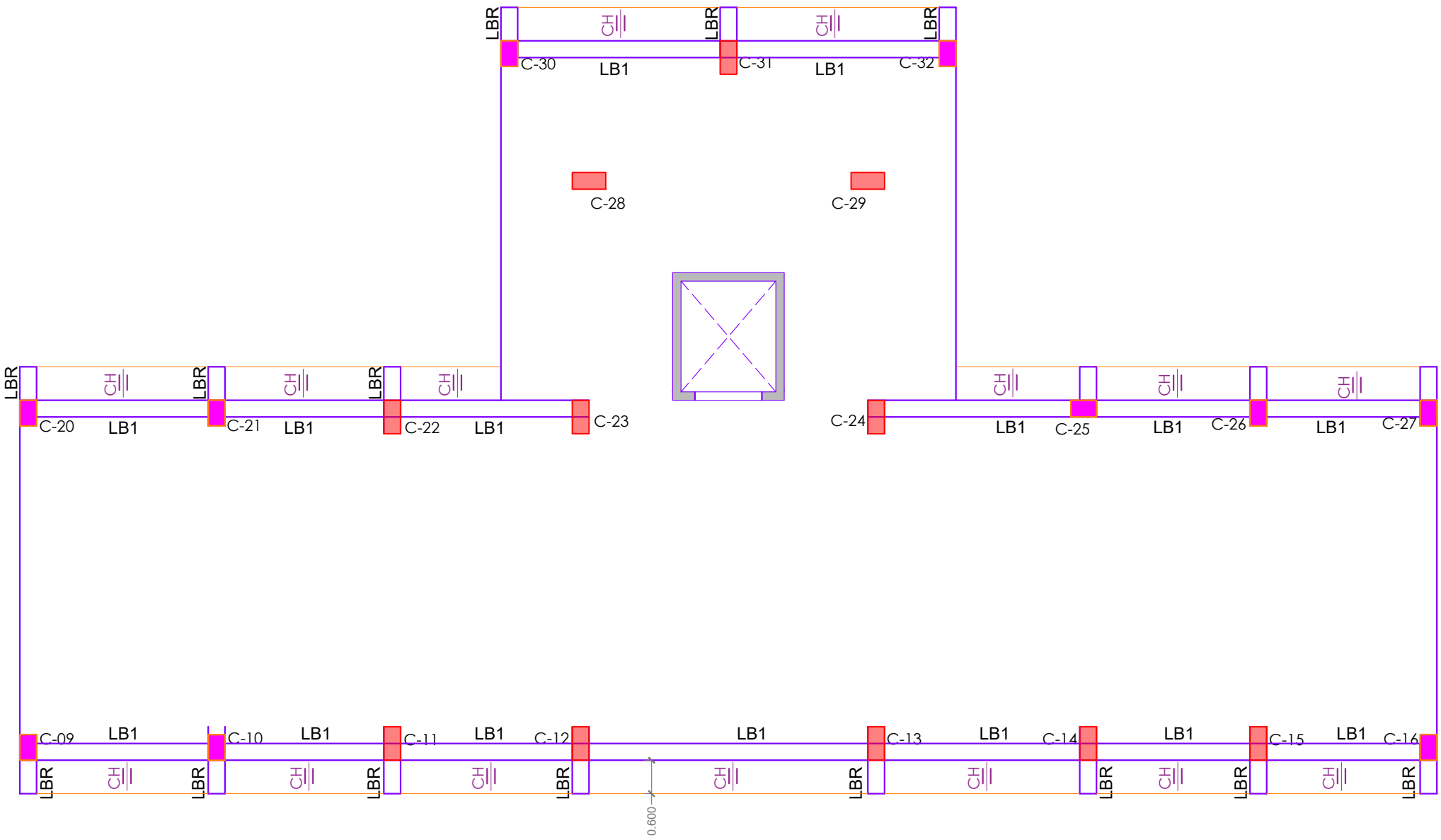

STRUCTURAL LAYOUT PLAN

LINTEL BEAMS AND LOFT SLAB (CHAJJA)

11. SCHEDULE OF LINTEL BEAMS :-

SR. NO.	BEAM	C/S SIZE	STEEL IN BEAMS		CURTAIL BAR 0.6	EXTRA TOP (AT FIXED END) 0.25L	STIRRUPS		REMARKS
			AT TOP	AT BOTTOM			AT SUPPORT	AT CENTER	
1	LB1	300X460	2NOS - 12MM TOR.	2 NOS - 16MM TOR.	1 NOS - 12MM TOR.	1 NOS - 16MM TOR.	8MM @ 100MM C/C	8MM @ 150MM C/C	LINTEL BEAM
2	LBR	300X380	2NOS - 16MM TOR.	3 NOS - 12MM TOR.	- - -	1 NOS - 16MM TOR.	8MM @ 100MM C/C	8MM @ 100MM C/C	CANTILEVER LINTEL BEAM

12. SCHEDULE OF CHAJJA SLAB :-

SR. NO.	SLAB	THICKNESS (MM)	STEEL IN SLAB		EXTRA TOP L / 4	DISTRIBUTION STEEL	REAMARKS
			SHORT SPAN	LONG SPAN			
1	CH	125	10MM @ 100MM C/C TOP FACE HOOKS	- - -	- - -	10MM @ 100MMC/C	CANTILEVER LOFT SLAB(09)

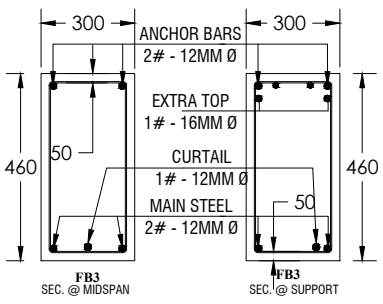

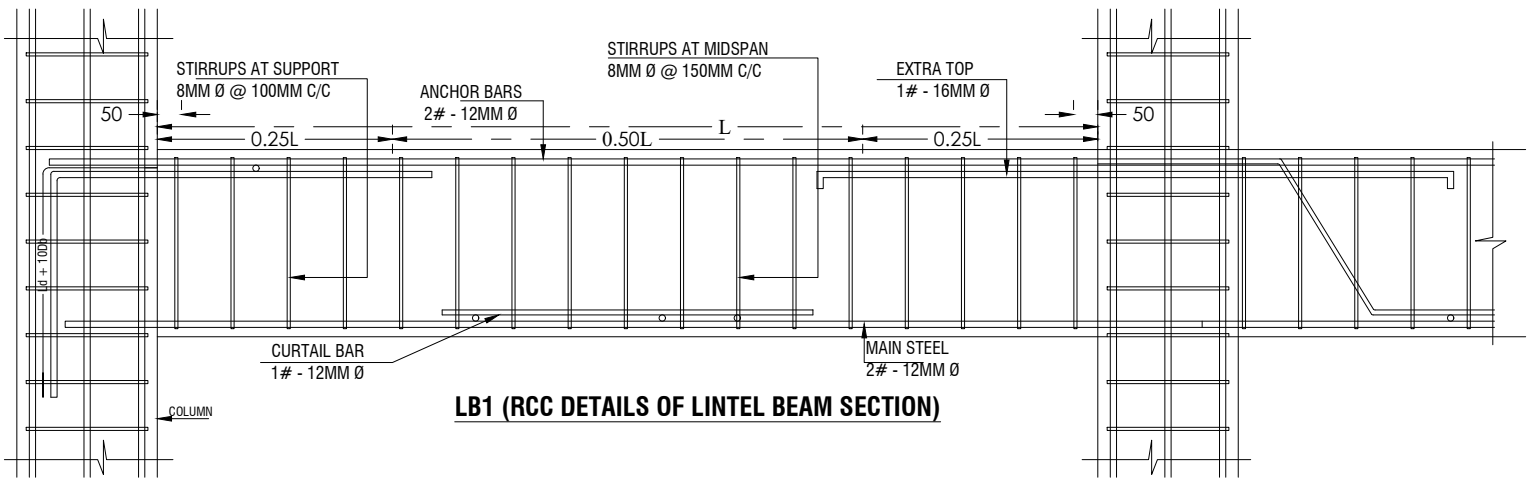

LB1 (RCC DETAILS OF LINTEL BEAM SECTION)

SIGNATURE	GENERAL NOTE'S:-	PROJECT DETAILS:-	PROJECT MANAGEMENT CONSULTANT:-
	* GRADE OF CONCRETE M - 25 & GRADE OF STEEL Fe500 * SBC OF STRATA IS CONSIDERED AS 200 kN/Sq. M. TO BE VERIFIED WITH SITE SOIL TESTING REPORT. * COVER TO REINFORCEMENT FOR FOOTING IS 50 mm, * COVER TO COLUMNS IS 40 MM, BEAMS IS 25 MM, SLAB IS 20MM * STRUCTURAL DESIGN IS FOR G+2 FLOOR ONLY. * DIMENSIONS ARE NOT TO BE SCALED. * MECHANICAL MIXER SHOULD BE USED FOR CONCRETE. * STEEL SHOULD BE CHECKED BY ENGINEER BEFORE CONCRETING. * MINIMUM STAGGARED LAP LENGTH SHOULD BE 50 TIMES DIA. OF REBAR.	R.C.C DESIGN DETAILS OF LINTEL BEAMS FOR PROPOSED PWI OFFICE BUILDING AT KURDUWADI STATION, SOLAPUR, MAHARASHTRA.	PROJECT CONSULTANT Buildwey Consultants Consulting Engineers & Project Managers Chh. Sambhajinagar. Maharashtra Contact: 9970626286 e -mail : buildweyconsultants@gmail.com
		SHEET NO:- 08 | JOB ID: BW_125	DATE:- 11 APRIL 2026 | REV. : 00